CC13001,2,5,8
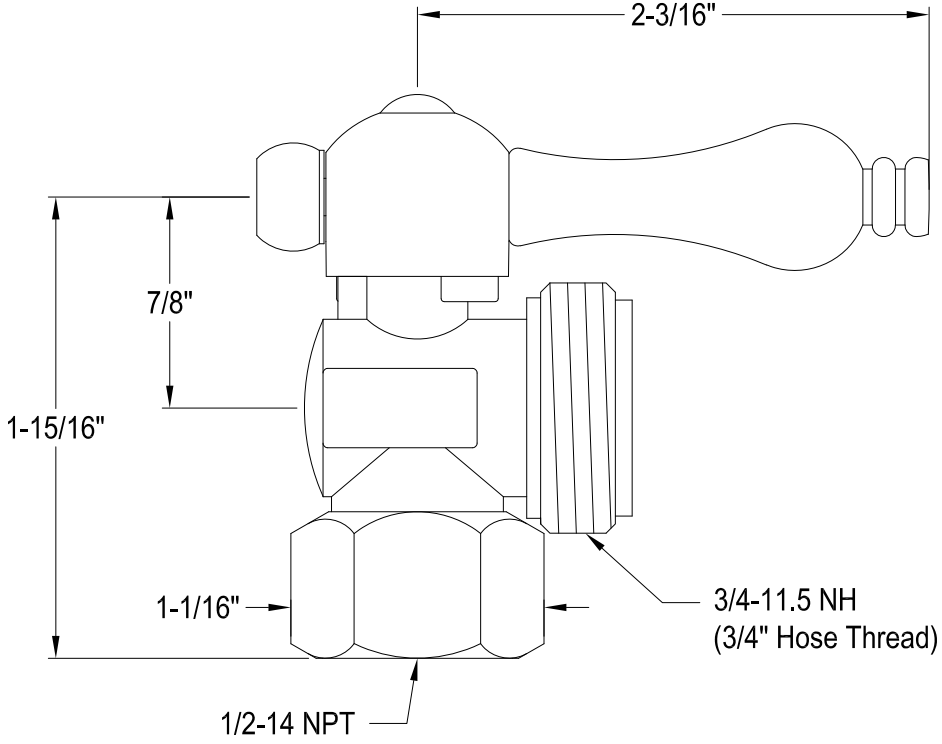
Quarter Turn Valves, 1/2" FIP x 3/4" Hose Thread